Carrier Aggregation as a Repeated Game: Learning Algorithms for Efficient Convergence to a Nash Equilibrium

Hamed Ahmadi, Irene Macaluso, Luiz A. DaSilva

CTVR the telecommunications research centre

sfi Science Foundation Ireland

TRINITY COLLEGE DUBLIN COLÁISTE NA TRÍONÓIDE | THE UNIVERSITY OF DUBLIN

Motivation

- Extension of current static CA to dynamic CA has been explored recently
- Dynamic CA is possible in a distributed manner
- Few works allow each network to aggregate non-contiguous channels in multiple frequency bands
- Effect of out-of-channel (OOC) interference in adjacent frequency channels is not considered in existing works

What we do

- We model the preference for contiguous channels aggregation (relaxing channel orthogonality)
- We assign a higher cost to the inter-band CA on account of the corresponding physical layer requirements
- We model the problem of dynamic CA as a non-cooperative game
- We propose learning algorithms that converge to a pure NE within a reasonable number of iterations under the conditions of incomplete and imperfect information

Intra-band and inter-band CA

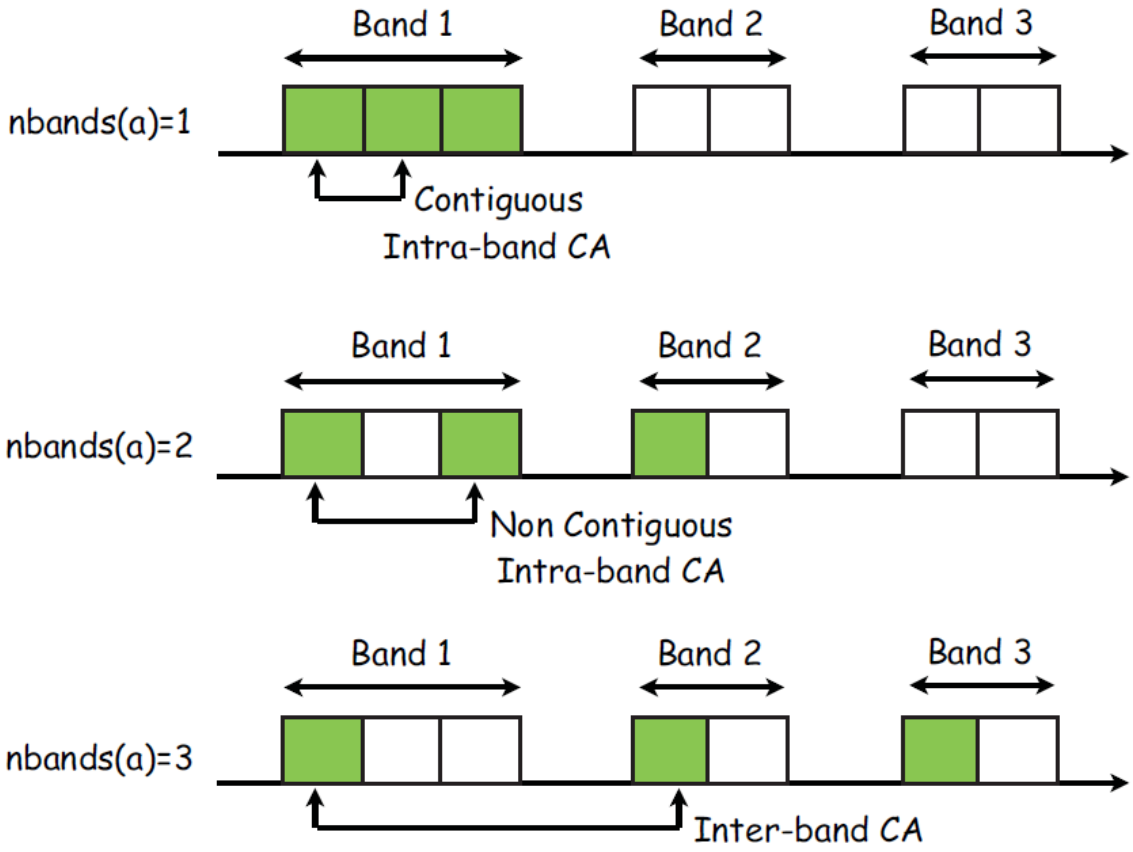

nbands(a) is the number of bands that a node accesses when selecting action a

System model

- *N* wireless networks
- *B* available frequency bands, each band has K_b channels
- The cardinality of each network's action space is:

$$|\mathcal{A}_i| = \sum_{n=0}^{M_i} \binom{M}{n}$$

- The reward function of network i is

$$r_i(\mathbf{a}) = \begin{cases} \frac{1}{M_i} \sum_{c_i \in a_i} \left(1 - \frac{\gamma_{c_i}}{\bar{\gamma}_i}\right) - \frac{(\text{nbands}(a_i) - 1)\delta}{N_{B_i}} & \text{if } a_i \neq \emptyset \\ 0 & \text{if } a_i = \emptyset \end{cases}$$

- Distributed CA problem as a game denoted by *G = (N,A, r)*

The game

- We prove that

  At least one Nash equilibrium in pure strategies exists in CA game G

- Players are not aware of each others actions
- At each stage, each player chooses an action according to the learning algorithm and observes a response from the environment.
- The feedback includes the estimated level of interference in all the available channels

ITEL-BA

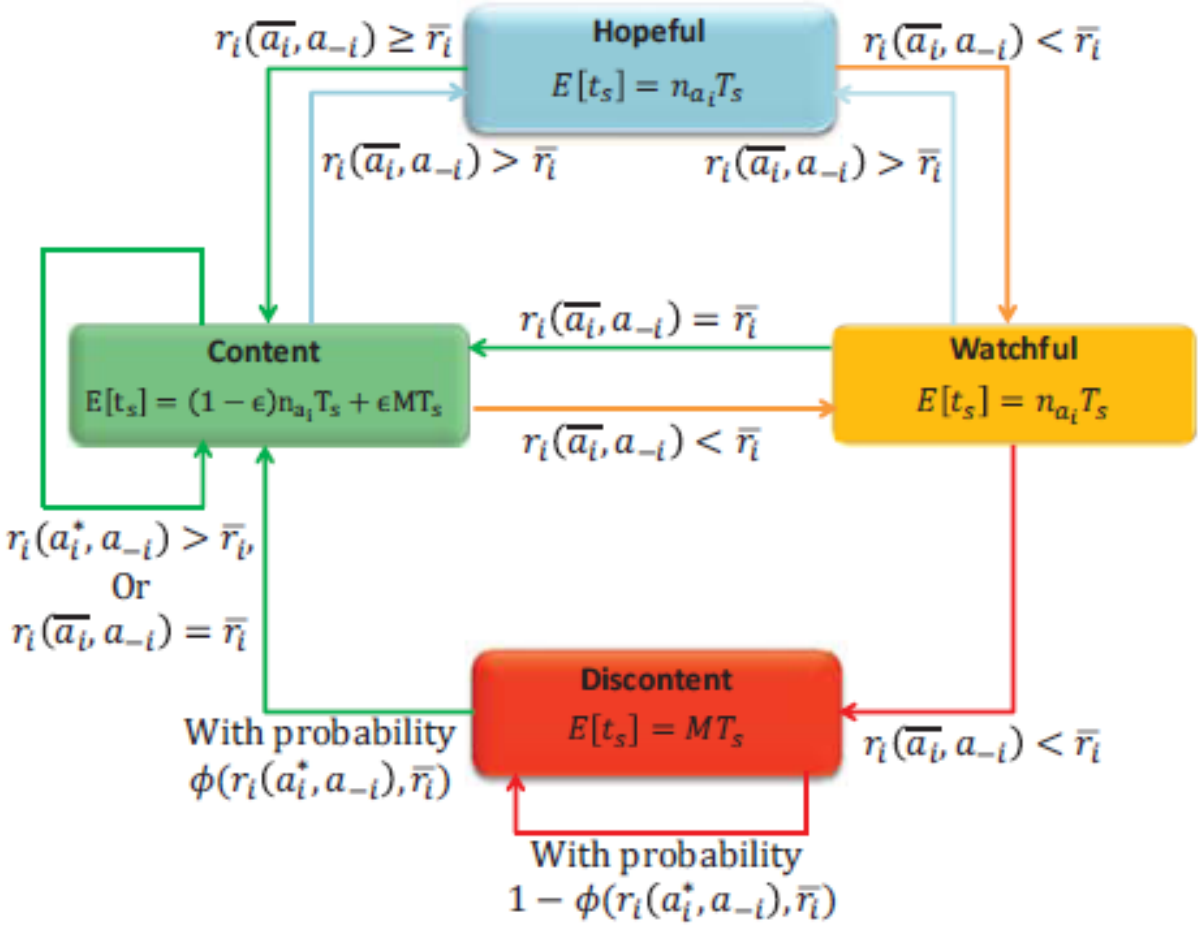
Hopeful
$E[t_s] = n_{a_i} T_s$
Content
$E[t_s] = (1-\epsilon) n_{a_i} T_s + \epsilon M T_s$
Watchful
$E[t_s] = n_{a_i} T_s$
Discontent
$E[t_s] = M T_s$
$r_i(\overline{a_i}, a_{-i}) \geq \overline{r_i}$
$r_i(\overline{a_i}, a_{-i}) < \overline{r_i}$
$r_i(\overline{a_i}, a_{-i}) > \overline{r_i}$
$r_i(\overline{a_i}, a_{-i}) > \overline{r_i}$
$r_i(\overline{a_i}, a_{-i}) = \overline{r_i}$
$r_i(\overline{a_i}, a_{-i}) < \overline{r_i}$
$r_i(a_i^*, a_{-i}) > \overline{r_i}$,
Or
$r_i(\overline{a_i}, a_{-i}) = \overline{r_i}$
With probability
$\phi(r_i(a_i^*, a_{-i}), \overline{r_i})$
$r_i(\overline{a_i}, a_{-i}) < \overline{r_i}$
With probability
$1 - \phi(r_i(a_i^*, a_{-i}), \overline{r_i})$

ITEL-BA with imperfect information

- To deal with noisy feedback/sensing, each player computes the received and hypothetical payoffs and then updates $r_i(k)$ using an *n*-sample weighted moving average

- In ITEL-BAWII, when a player experiments with new actions either in content or discontent mood, she will select the action that maximizes the average estimated payoff $r_i(k)$

- The expected sensing time is TsM for all the states

Results

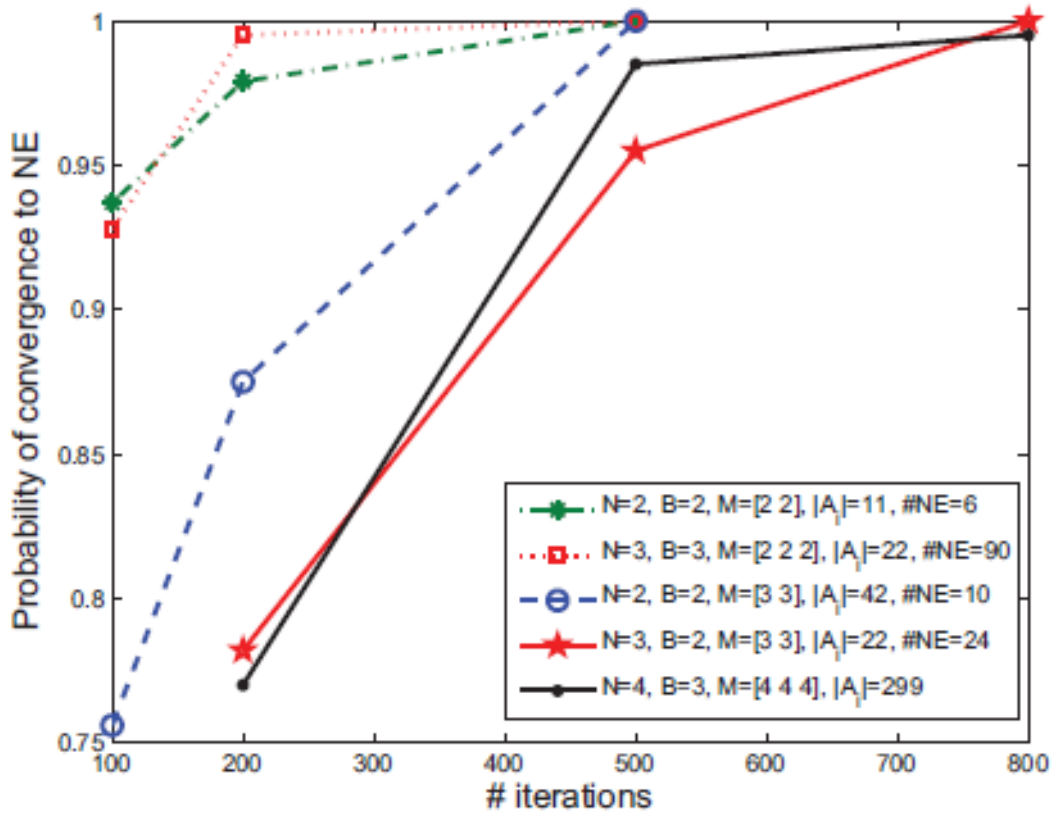

Convergence probability of ITEL-BA to an NE for different scenarios

Results

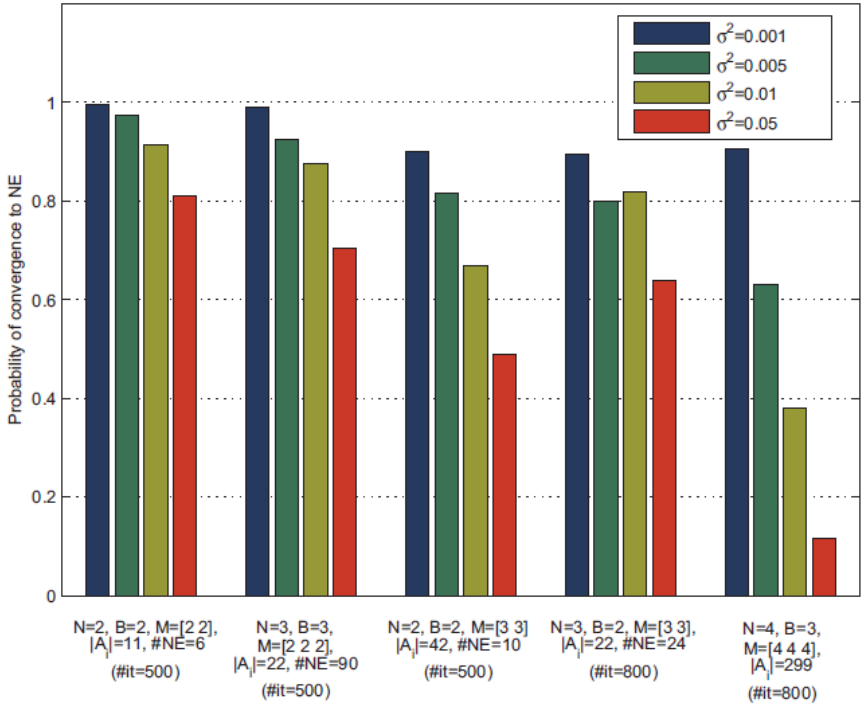

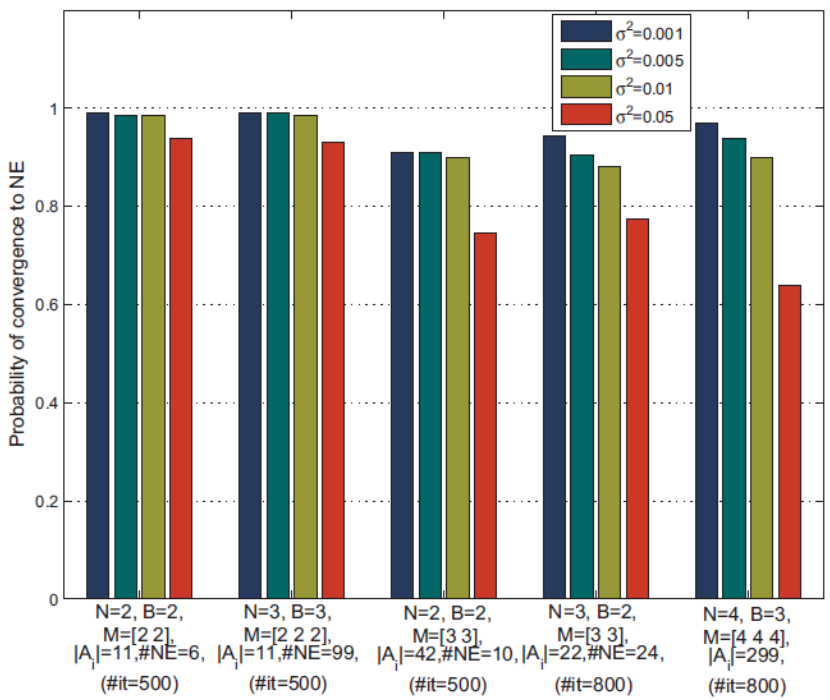

Convergence probability of ITEL-BA and ITEL-BAWII when the observations are not perfect

Conclusions

- We modelled CA problem of autonomous networks operating in shared spectrum as a repeated game
- We proposed learning algorithms that efficiently converge to an NE without the need for complete or even perfect information
- Our results show that the algorithm, which effectively converges to an NE with incomplete information (ITEL-BA), is not efficient in the case of imperfect information
- Our algorithm that effectively deals with imperfect and incomplete information (ITELBAWII) requires additional sensing and computational resources

Thank you
Questions?